1251. SPLIT REMOTE CONTROL VALVE

Safety regulations imposed in many countries throughout the world consider manual sand abrasive blasting as hazardous and impose blasting systems to be equipped with remote controls, giving the operator maximum safety.

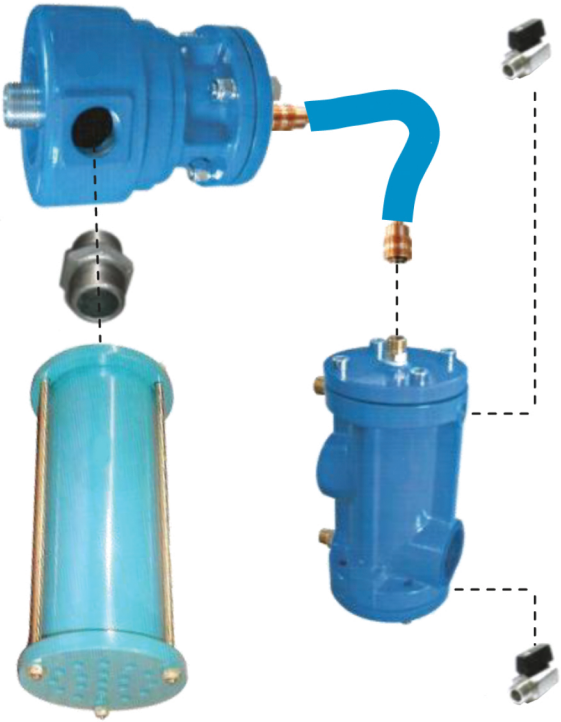

Pneumatically operated remote control system. To be used when the length of the blasting hose does not exceed 20 meters, as otherwise the delay from releasing the "deadman handle" until the closing of the air valve will be too long.

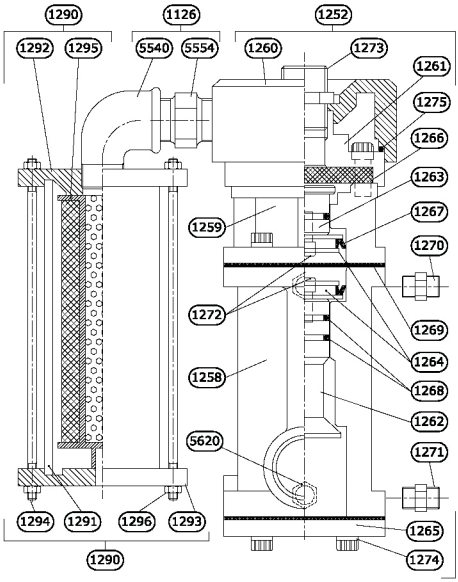

The Remote Control Systems are all equipped with so called "deadman handles".

To start the blasting machine, the operator must press down the "deadman handle", thereby allowing the air inlet valve to open and the air outlet to close. This will enable to start blasting.

Should the operator, at any time, want to stop blasting, he releases his hold on the handle, which immediately will close the air inlet valve and open the exhaust valve, thus depressurising the blasting machine.

Should any incident occur to the operator and he releases his grip on the "deadman handle", the blasting machine will stop immediately, thus avoiding injuries.